twicebright

DR SERIES
Drivers / PSUs / Controllers

DR-RGBW-WIFI-CON - RGB/W WiFi CONTROLLER

Product Features:

- Controls RGB, RGBW, CCT tuneable and single color LED tape light
- Control with IOS or Android app over WiFi
- Set custom scenes
- Control up to 4 zones (3 zones for wall mount). up to 8 zones on mobile app

Product Specifications:

Controller

- Input: 12 - 36VDC, must use non-dimmable power supply.
- Output: 4 x 8A (12V=96W, 24V=192W, 36V=288W)
- WiFi controlled by APP installed on IOS or Android moble devices while working with WiFi-RF converter.
- Brightness of each R, G, B and W can be adjusted to achieve millions of colors.
- Control up to 4 zones (3 zones for wall mount)
- Set custom scenes

Warranty

- Two year warranty against manufacturer defects in material or workmanship. Please refer to our Terms of Sale for full warranty terms and conditions.

Remotes / Wall Mount

- All remotes and wall mounts are RF (Radio Frequency) Up to 100'.
- **DR-RGB-WIFI-REM** - for RGB LEDs
- **DR-RGBW-WIFI-REM** - for RGBW LEDs
- **DR-CCT-WIFI-REM** - for CCT LEDs
- **DR-SC-WIFI-REM** - for single color LEDs
- **DR-RGBW-WIFI-WM** - for RGBW LEDs
- Multi-zone, dimming and scene selection.

Mobile Application

- "EasyLighting EasyLife"

Twice Bright Lighting Co. Ltd.
207 - 8291 92 Street · Delta, BC · Canada · V4G 0A4 (778) 297-2121 · (888) 484-7295 · info@twicebright.com · www.twicebright.com

DR-RGBW-WIFI-CON - RGB/W WiFi CONTROLLER

Product Dimensions:

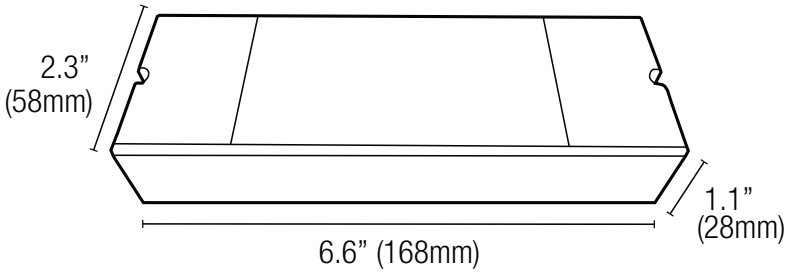

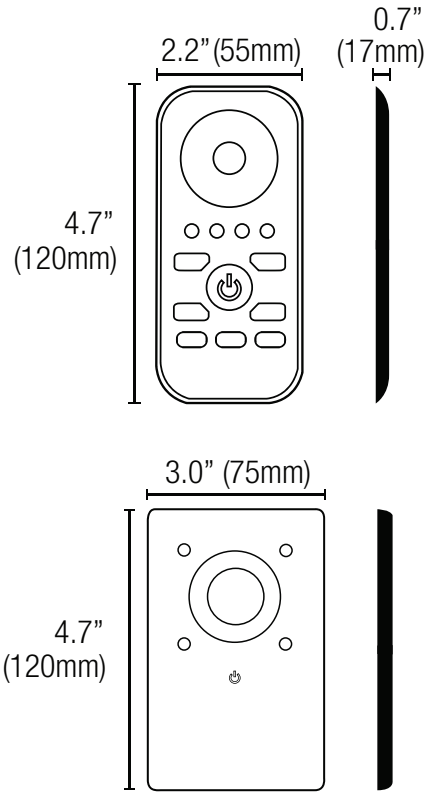

Ordering Code:

DR	–	RGB	–	WIFI	–	CON
DR SERIES - Drivers & controllers		**RGB** - Color changing		**WIFI** - Controlled through WiFi app		**CONTROLLER** - Controller/reciever

Eg. DR-RGB-WIFI-CON

DR	–		–	WIFI	–	
DR SERIES - Drivers & controllers		**LOAD TYPE** **RGB** - Red, Green, Blue **RGBW** - RGB White **CCT** - CCT adjustable **SC** - Static color		**WIFI** - Remote works congruently with WiFi app		**REMOTE TYPE** **REM** - Handheld remote **WM** - Wall Mount remote*

Eg. DR-RGBW-WIFI-REM

***WM** - Wall mount only available for RGB or RGBW control